Adeunis Pulse V4

µWiotys first compatible version 1.3.0
µWiotys device reference ARF8230ABA

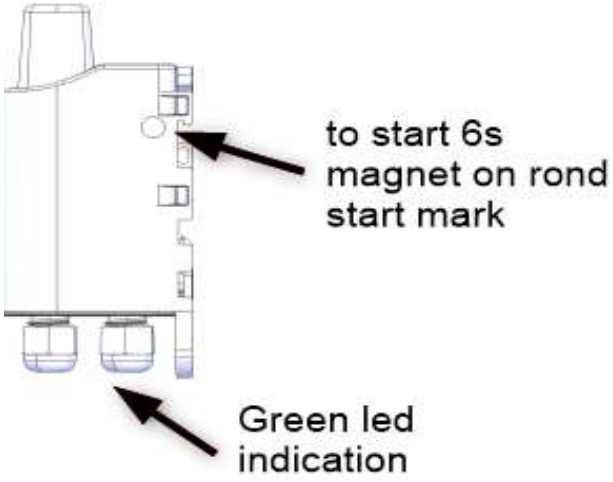

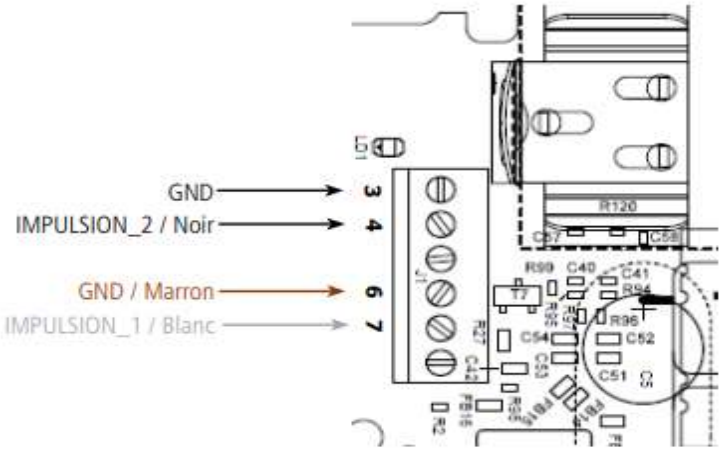

Address (hex)	Address (dec)	Size	description	Unit	Data Type
1	1	4	DevEUI		U64
6	6	2	last payload timestamp	second	U32
11	17	1	Device Battery	%	U16
4000	16384	2	last payload timestamp for Energy	second	U32
4002	16386	2	index1 : pulse 1 value		U32
4008	16392	2	index2 : pulse 2 value		U32